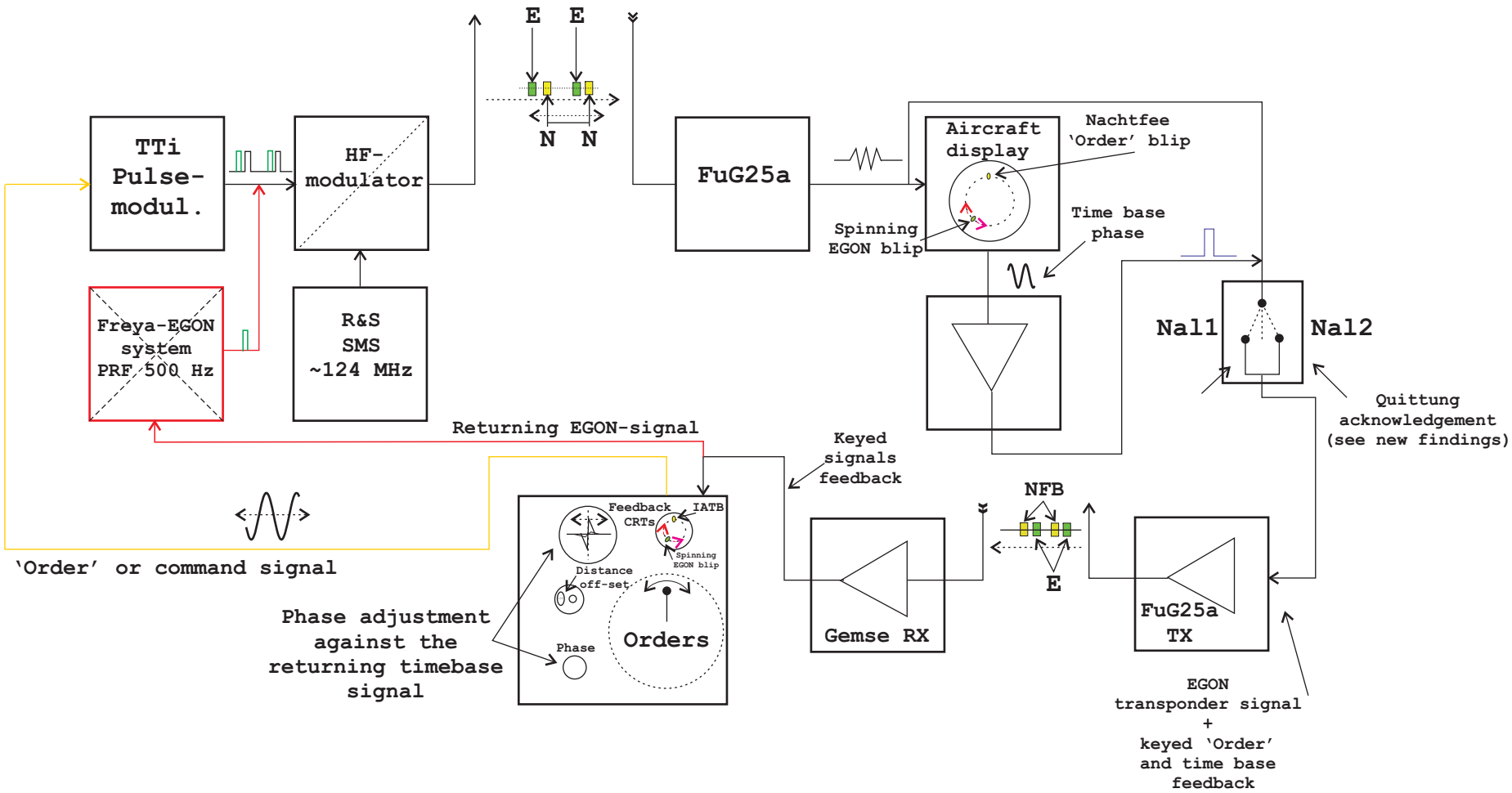
TTi
Pulse-
modul.
HF-
modulator
E E
N N
FuG25a
Aircraft
display
Nachtfee
'Order' blip
Spinning
EGON blip
Time base
phase
Freya-EGON
system
PRF 500 Hz
R&S
SMS
~124 MHz
Nal1
Nal2
Quittung
acknowledgement
(see new findings)
Returning EGON-signal
Keyed
signals
feedback
NFB
E
'Order' or command signal
Feedback
CRTs
IATB
Spinning
EGON blip
Distance
off-set
Phase
Orders
Phase adjustment
against the
returning timebase
signal
Gemse RX
FuG25a
TX
EGON
transponder signal
+
keyed 'Order'
and time base
feedback